Abstract

WIFI Control Car – Arduino Concept

"We built the car employing a variety of transmission methods. But what about a car that can be controlled over WIFI."

WIFI is the most promising technology right now, and developers are always working to improve it. This technology is prevalent today and will be for many years to come. WIFI with low power consumption has also been developed. So let us concentrate on this technology today. We created a car that can be controlled via WIFI. If you host your IP address on a website, you can control it from anywhere in the globe, but we'll stick to local WIFI for now. So, let's get started.

About the Node MCU and the Car

Node MCU is an ESP-32S microcontroller (MCU) similar to the 328P, except it has WIFI incorporated into the ESP-32S. This is a fantastic resource for IOT newcomers. It can connect over WIFI and can function as a Hotspot. See the diagram above for the pinout. In the Arduino code, the GPIO numbers will be used.

Now, in this situation, the Node MCU connects with my router and generates a local IP address, which we can enter into our mobile device or computer (both of which are linked to the same router) to see a webpage appear with various buttons that allow us to operate the automobile. You can now control the car with the help of the website.

Connections and Uploading Code

Setup your chassis. Connect motors, wheels, and the caster wheel with screws. Solder wires with motors and connect them to sockets of the driver.

See the figure above and connect. Connect your motors as per your configuration. If you are connecting your motor for the first time with the L298N driver then at a first run a code for moving forward with the UNO. Then give a try to the right and then left. Backward will follow it. It will be just a case of digitalWrite(). Comment freely if you are not okay. Power is required for the Node MCU as well as the L298N. It will be better by using a different supply for the two things. Give 5V from the power bank at the Vin and GND of Node MCU. You can use 9V or 12V for L298N.

The whole process is rather easy. See the pictures given in the report and refer to the pinout pic of Node MCU. You will understand it better.

Opening Browser

Get into the website from your device browser. You can see the following webpage. It has already been a host on a free domain site. Press any button and run the car, if not running, check the power supply given and for any loose connections happening. Do not give Node MCU beyond 5V. You can use 12V for the L298N. So now, you can enjoy riding the WIFI-controlled car.

Introduction

Microcontrollers

Microcontrollers are everywhere around us, even when we drive our vehicles, on all computers we use including smartphones and tablets, or sometimes when making a cup of coffee on our coffee machines. With the rapid spreading of IoT technology, data is constantly being gathered, microcontrollers have become a huge part of the modern world with a lot of fields of application.

What is a Microcontroller?

A microcontroller which is also called an MCU or Microcontroller Unit is a single Integrated Circuit (IC) that is usually used for a specific application and designed to implement certain specific tasks. This is a small computer based on a single metal-oxide-semiconductor (MOS) integrated circuit (IC) chip. A microcontroller contains one or more CPUs or processor cores with memory and programmable input/output peripherals attached to it. Program memory in the form of ferroelectric RAM, NOR flash, or OTP ROM is also often included on this chip, as well as a small amount of RAM along it.

“Microcontroller” is a well-chosen name for this apparatus because it emphasizes the defining characteristics of this product category precisely. The prefix “micro” implies size or the smallness of the device and the term "controller" here implies the enhanced ability of the device to perform control functions. The functionality of this device is a result of a combination of a digital processor and a digital memory with additional hardware components that are specifically designed to help the microcontroller to interact with the other components.

Microcontrollers are usually designed for embedded applications, in contrast to the microprocessors which are used in personal computers or other general-purpose applications. They are essentially simple miniature personal computers designed to control small features of a larger component, without a complex front-end operating system.

A microcontroller is similar to but less sophisticated than, a System on a Chip (SoC). An SoC may include a microcontroller as one of its components, but in addition, it is also integrated with advanced extensions like a graphics processing unit (GPU), a Wi-Fi module, or coprocessors.

By reducing the size and cost compared to a design used on a separate microprocessor, memory, and input/output devices, microcontrollers make it economical to digitally control even more devices and processes very easily. Mixed-signal microcontrollers are very common. They function by integrating analog components needed to control non-digital electronic systems. About the internet of things and robotics, microcontrollers are an economical and popular means of data collection, sensing, and actuating the physical world as edge devices.

Microcontrollers generally can retain functionality while waiting for an event like a button press or some other interrupt. Other microcontrollers may serve performance-critical roles at which they may need to act more like a digital signal processor (DSP) than a microcontroller, with higher clock speeds and power consumption.

A microcontroller is also known as an embedded controller. Various types of microcontrollers are available in the market with different word lengths. It is like a compressed microcomputer manufactured to control the functions of the embedded systems in appliances machines used in offices, robots, home appliances, motor vehicles. Microcontrollers are employed in devices that need a degree of control to be applied by the user of the device in controlling it.

A microcontroller can be also defined as a small and low-cost microcomputer, which is designed to perform the specific tasks of embedded systems like displaying microwave information, receiving remote signals, etc. Any electric appliance that stores, measures, displays information, or calculates comprises a microcontroller chip inside it.

What a microcontroller does is, gathers input, process this information, and outputs a certain action based on the information gathered by it. Microcontrollers usually operate at lower speeds, around

the 1MHz to 200 MHz range, and are designed to consume less power because they normally are embedded inside other devices that can have greater power consumptions than the MCU.

A Microcontroller can be considered as the backbone of Embedded Systems and its most important feature is the fact that "It can think". A Microcontroller may look like a simple electronics chip, but it’s way too powerful because it's programmable. Using a programming code, we can control all I/O pins of a microcontroller and are used to perform multiple functions.

C and assembly languages are usually used for programming a microcontroller but the HEX File which gets uploaded in Microcontrollers is in machine language. There are also other languages available for programming a microcontroller but beginners start with assembly language as it provides a clear idea about the microcontroller's architecture.

History

The origins stories of both the microprocessor and the microcontroller go back to the invention of the MOSFET, also known as the MOS transistor. Mohamed M. Atalla and Dawon Kahng at Bell Labs invented it in 1959. Atalla also proposed the MOS integrated circuit, which was an integrated circuit chip fabricated using MOSFETs. MOS had higher transistor density and lower manufacturing costs than bipolar chips. MOS chips increased in complexity with time, leading to large-scale integration (LSI) with hundreds of transistors on a single MOS chip. The application of the MOS LSI chip was the basis for the first microprocessors when engineers recognized that a complete computer processor could be contained on a single MOS LSI chip.

The first-ever multi-chip microprocessors, the Four-Phase Systems, and the Garrett Ai Research MP944 were developed with multiple MOS LSI chips. The first single-chip microprocessor, which was the Intel 4004, was released on a single MOS LSI chip.

Engineers Gary Boone and Michael Cochran created the first microcontroller in 1971. The TMS 1000, combined read-only memory, read/write memory, processor, and clock on one chip and mainly targeted at embedded systems.

After that, Japanese electronics manufacturer began producing microcontrollers for automobiles, including 4-bit MCUs for in-car entertainment, automatic wipers, electronic locks, and dashboard, and 8-bit MCUs for engine control.

Nowadays microcontrollers are cheap and are also readily available for hobbyists, with large online communities around certain processors.

A typical home in a developed country is likely to have only four general-purpose microprocessors but around three dozen microcontrollers. A typical mid-range automobile has about 30 microcontrollers. They can also be found in many electrical devices such as washing machines, microwave ovens, and telephones.

Types of Microcontrollers

Microcontrollers are classified based on Bus-width, Memory, Instruction Set, Architecture, & Manufacturer.

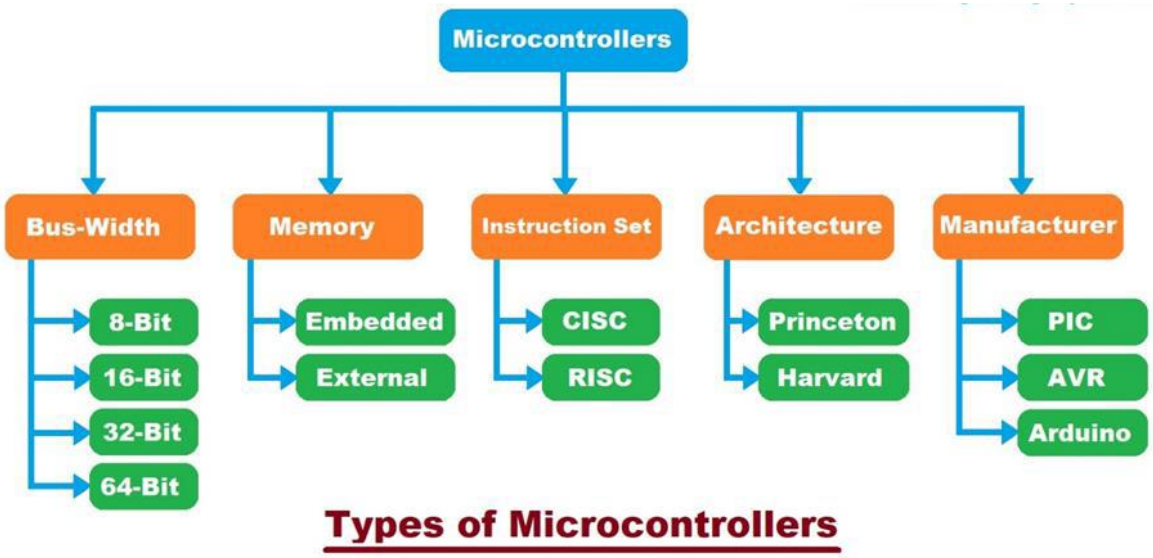

Fields where Microcontrollers are used.

Microcontroller has many applications like:

• As a peripheral controller of a PC

• In robotics and embedded systems

• In bio-medical equipment

• In communication and power systems

• In automobiles and security systems

• When implanting medical equipment

• In fire detection devices

• In temperature and light-sensing devices

• In industrial automation devices

• In-process control devices

• When measuring and controlling revolving objects

ESP-8266

ESP8266 is a low-cost Wi-Fi chip produced by Espressif Systems.

ESP Modules

ESP-01

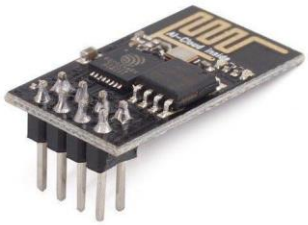

ESP-12

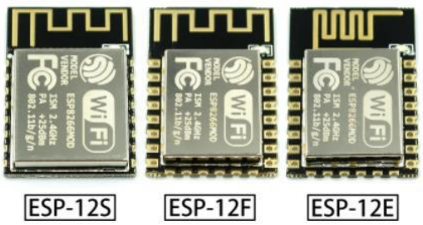

ESP-02

ESP-30

ESP-8266 Chip Block Diagram

The functional diagram of ESP8266EX is shown as in Figure 3-1.

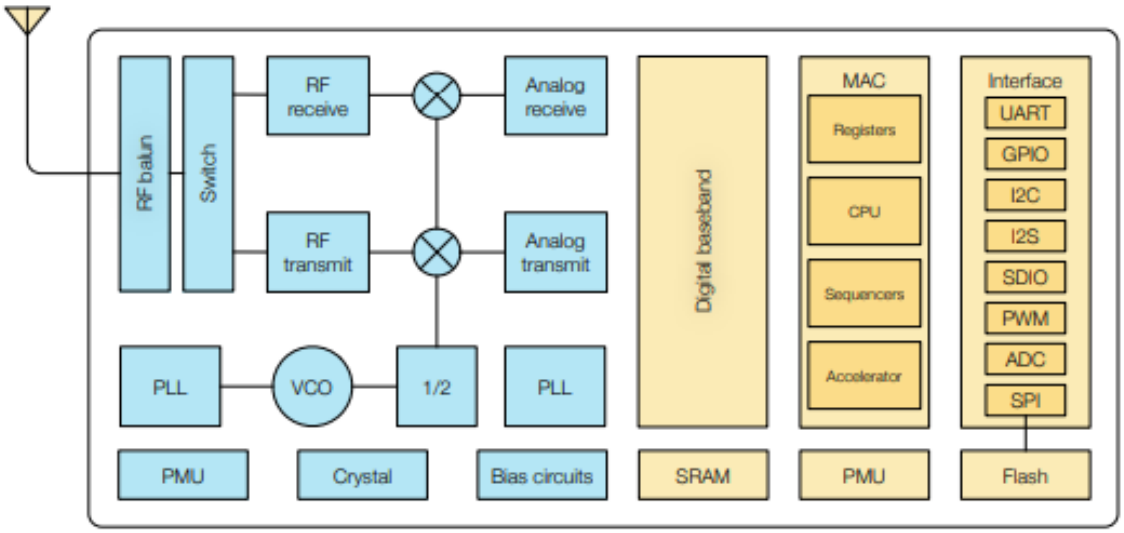

Figure 3-1. Functional Block Diagram

- Esp8266 has integrated a Tensilica L106 32-bit RISC processor. It got extra-low power consumption, which makes this chip very much suitable for small circuits, IOT Projects.
- This chip reaches a maximum clock speed of 160MHz.
- Wi-Fi- 2.4GHz receiver & transmitter
- User programs are stores in SPI flash
- Memory - 32KB instruction RAM
- External SPI Flash 512KB to 4MB typically in some cases 16MB supported according to the board you chosen

GPIO – I/O Pins in the Board

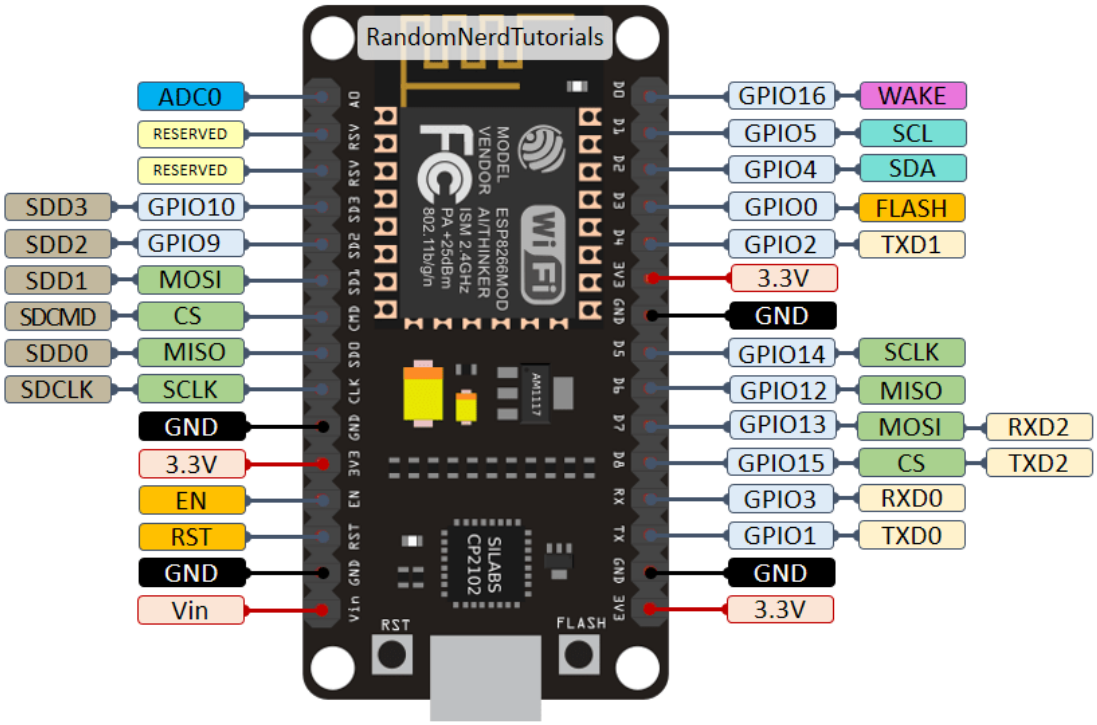

UART- is an asynchronous serial communication interface via Rx Tx pins

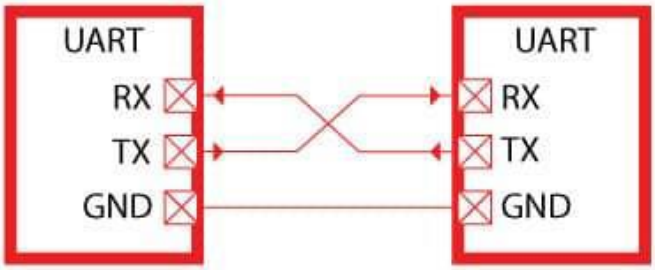

SPI- is a synchronous serial communication interface via SS SCLK MOSI MISO Pins.

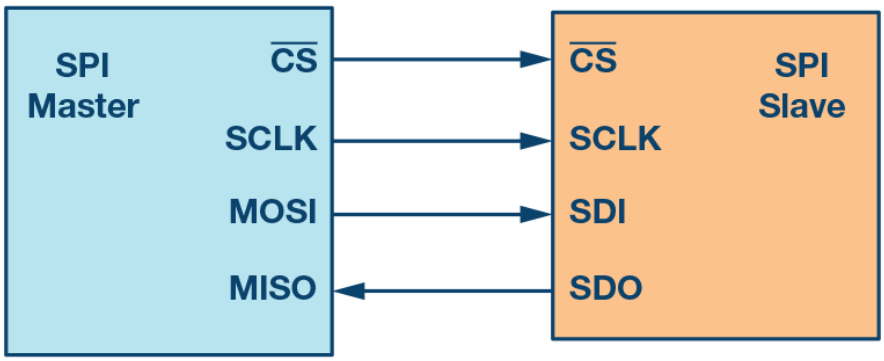

PWM - way to reduce the power delivered by an electrical signal

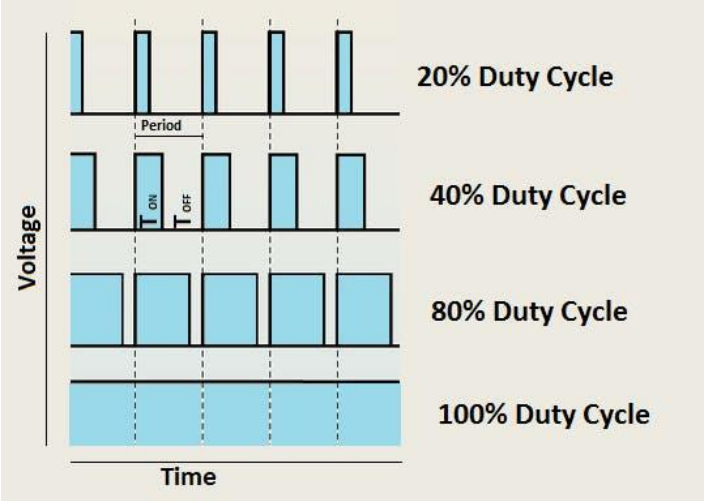

ADC-Analog to Digital Converter Converting analog inputs to digital signals

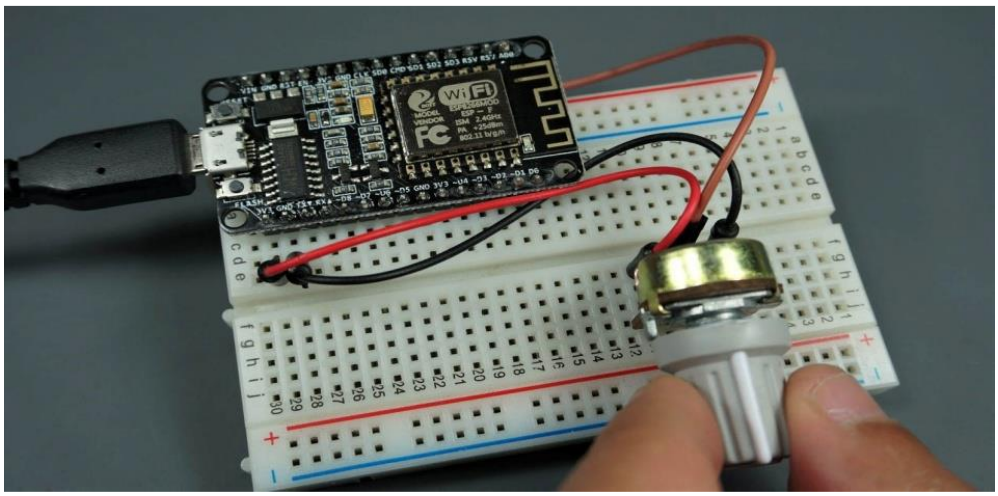

I2C is a serial communication protocol data is transferred bit by bit by a single wire (SDA Line). SCL is the clock line. It is used to synchronize all data transfers over the I2C bus. SDA is the data line.

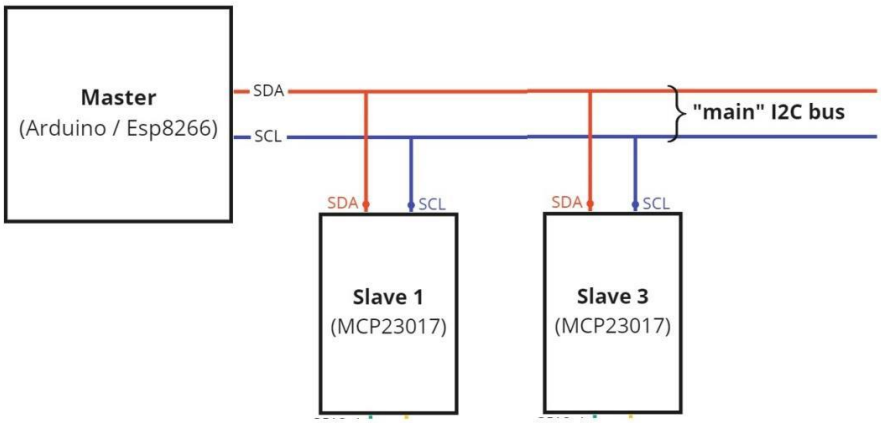

I2S is an electrical serial bus interface used to connect digital audio devices. Consists of a clock line, word clock (left-right clock) line, and serial data line.

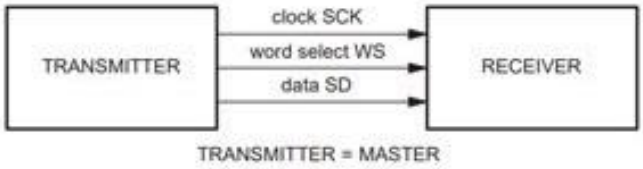

SDIO (Secure Digital Input/Output Interface) - SDIO is used for Data exchange between host and device. SDIO can connect the SD Slot with I/O devices like Bluetooth, Wireless LAN, GPS Receiver, Digital Camera, etc.

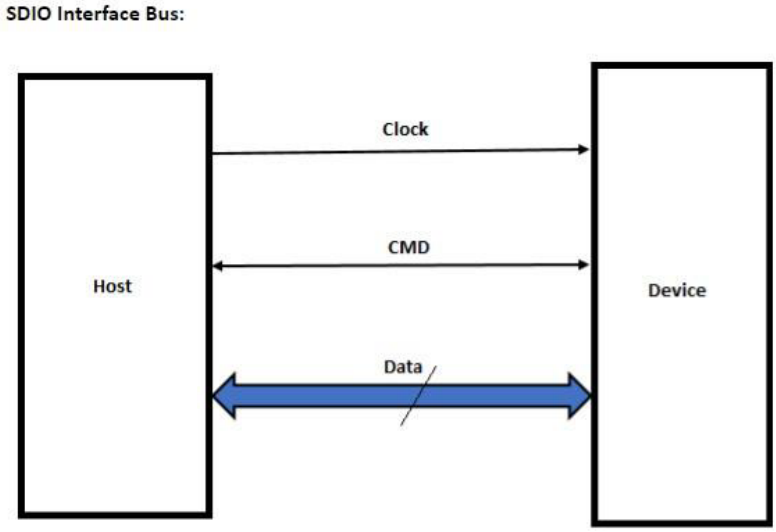

Intro for Motor Driver

Pulse Width Modulation (PWM)

- In the PWM signal, the minimum and maximum voltage are the values that limit the wave's oscillation.
- The space between them is called amplitude.
- A cycle is the interval of the wave where you can find one full repetition.
- The time that takes a cycle to finish is called a period. Frequency =1/period
- Duty Cycle represents how much of the period in which the signal is high.
- To calculate the duty cycle you need to know how much of the period the signal is high.

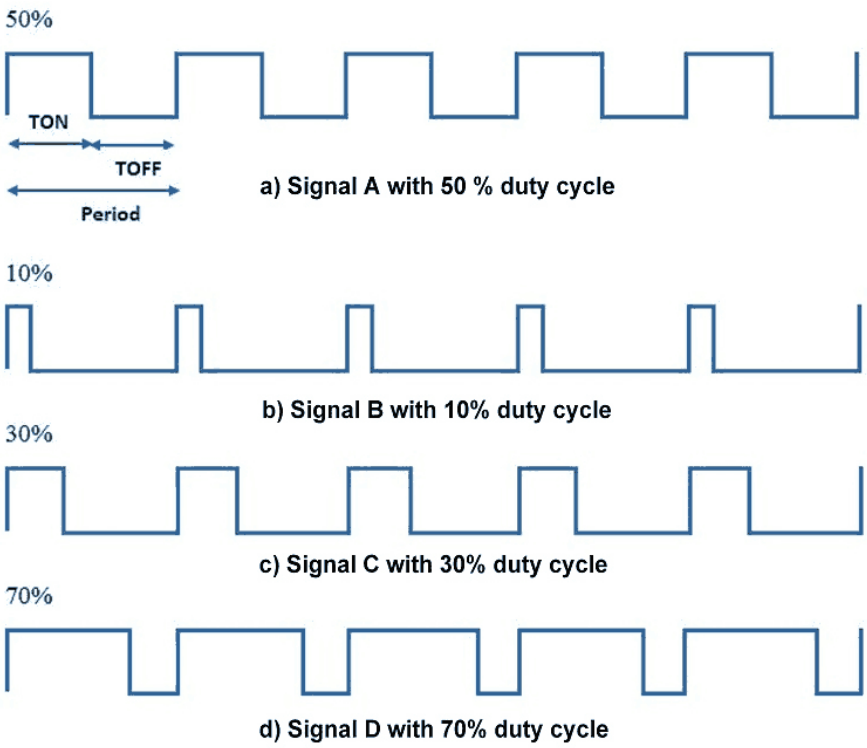

Calculating duty cycle = Take high time as 50ms and low time as 50ms

• Period is 100ms

• 50ms/100mx=50% duty cycle

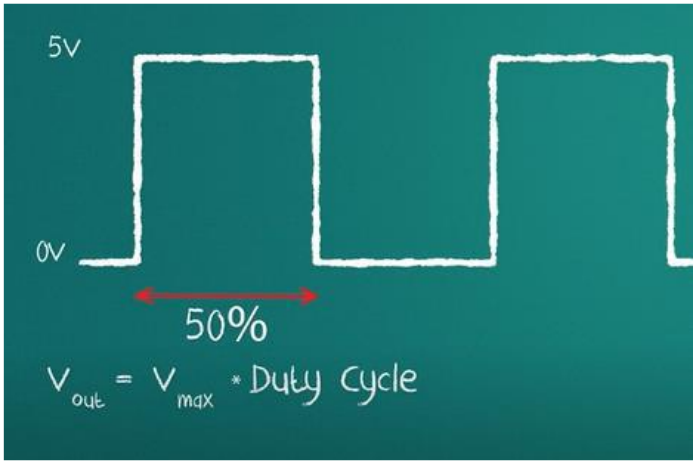

• 5v*50%=2.5v

Output=2.5v

Duty Cycle Resolution- Resolution is how many steps there can be between 0% and 100% in ESP8266 it is 0-1023(10bit) and in Arduino, It is 0-255(8bit)

Binary to Decimal Bit Value Table

(8 Bits in a Byte)

128	64	32	16	8	4	2	1
1 (On)	1 (On)	1 (On)	1 (On)	1 (On)	1 (On)	1 (On)	1 (On)
+ 128	+64	+32	+16	+8	+4	+2	+1

255

How PWM is controlled in Arduino-IDE

```
#defineENA  D1//Defining PIN D1 is pin no in NodeMCU
analogWrite(ENA, Speed);
pinMode(ENA, OUTPUT);//choosing is ENA is input or output
```

L293D Motor Driver

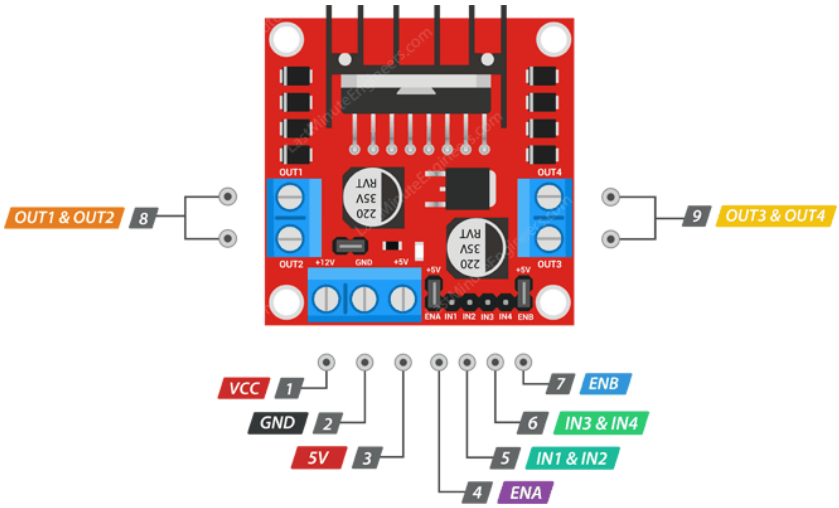

We can turn on and off the motor via ENA and ENB

A module usually comes with a jumper on those two pins when those are placed it is in ON state and on maximum speed

After removing the jumpers, by giving PWM signals to ENA and ENB pins we can control the speed of the motors

• VCC – voltage supply line for motors and the module (This module has a voltage drop of around 2volts, each channel can handle 2A)

• GND- Common pin

• 5V – it outputs 5V when a jumper is placed in 5V-EN (Also provide power for L298N IC through a 7805 5v regulator when the jumper is removed you need to provide 5v externally)

• ENA- making this pin HIGH will make motor A rotate or by giving Desired PWM Signal

• ENB- making this pin HIGH will make motor B rotate or by giving Desired PWM Signal

• IN1 & IN2 – These two pins control the direction of motor A rotation when IN1 is High and IN2 is LOW motor A will rotate clockwise and when IN1 is LOW and IN2 is the HIGH motor will rotate anticlockwise. If both pins are either HIGH or LOW motor will stop the spin

• IN3 & IN4 - These two pins control the direction of motor B rotation when IN3 is HIGH and IN4 is LOW motor A will rotate clockwise and when IN3 is LOW and IN4 is the HIGH motor will rotate anticlockwise. If both pins are either HIGH or LOW motor will stop the spin

• OUT1&OUT2 – Output for motor A

• OUT3&OUT4 – Output for motor B

IN1	IN2	Direction
0	0	OFF
1	1	OFF
1	0	Forward
0	1	Backward

Above is an XOR Gate (not in the datasheet)

Rotation Direction Changing

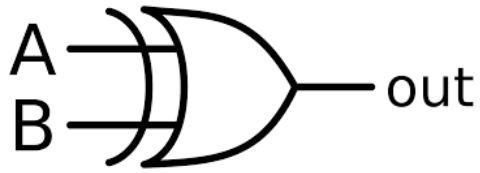

L293D Block Diagram

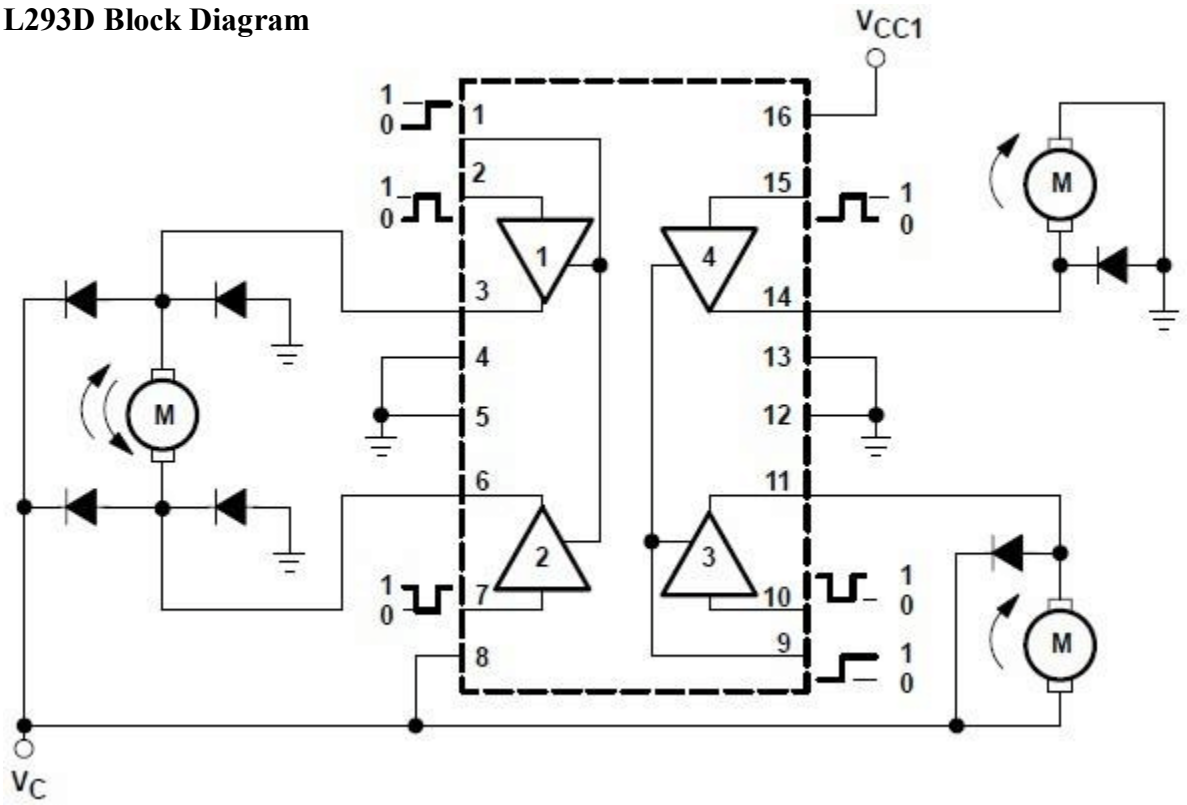

Forward

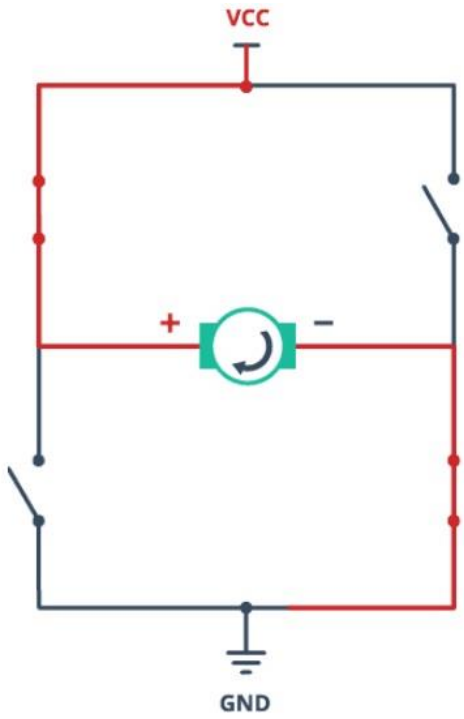

Working of H-Bridge

Backward

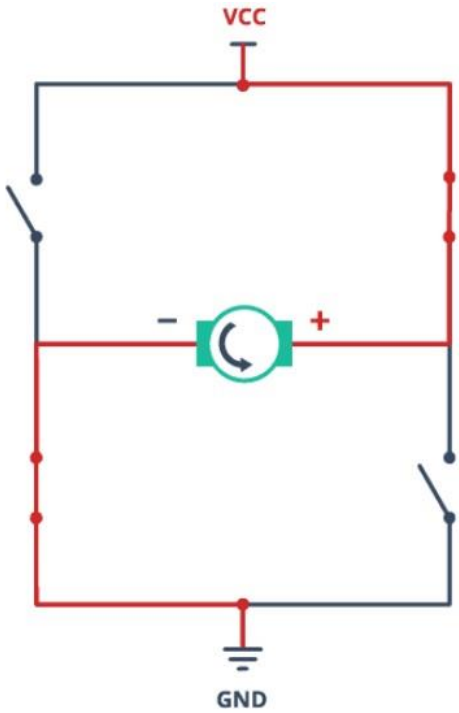

Working of H-Bridge

Arduino Code

```
#define IN_1  15          // L298N in1 motors Rightx          GPIO15(D8)
#define IN_2  13          // L298N in2 motors Right           GPIO13(D7)
#define IN_3  2           // L298N in3 motors Left            GPIO2(D4)
#define IN_4  0           // L298N in4 motors Left            GPIO0(D3)

#include <ESP8266WiFi.h>
#include <WiFiClient.h>
#include <ESP8266WebServer.h>

String command;             //String to store app command state.
int speedCar = 800;         // 400 - 1023.
int speed_Coeff = 3;

const char* ssid = "WIFI CAR 2";
ESP8266WebServer server(80);

void setup() {

 pinMode(IN_1, OUTPUT);
 pinMode(IN_2, OUTPUT);
 pinMode(IN_3, OUTPUT);
```

```
 pinMode(IN_4, OUTPUT);

  Serial.begin(115200);

// Connecting WiFi

  WiFi.mode(WIFI_AP);
  WiFi.softAP(ssid);

  IPAddress myIP = WiFi.softAPIP();
  Serial.print("AP IP address: ");
  Serial.println(myIP);

 // Starting WEB-server
     server.on ( "/", HTTP_handleRoot );
     server.onNotFound ( HTTP_handleRoot );
     server.begin();
}

void goAhead(){

      digitalWrite(IN_1, LOW);
      digitalWrite(IN_2, HIGH);
```

```
    digitalWrite(IN_3, LOW);
    digitalWrite(IN_4, HIGH);

  }

void goBack(){

    digitalWrite(IN_1, HIGH);
    digitalWrite(IN_2, LOW);



    digitalWrite(IN_3, HIGH);
    digitalWrite(IN_4, LOW);

  }

void goRight(){

    digitalWrite(IN_1, HIGH);
    digitalWrite(IN_2, LOW);
```

```
    digitalWrite(IN_3, LOW);
    digitalWrite(IN_4, HIGH);

  }

void goLeft(){

    digitalWrite(IN_1, LOW);
    digitalWrite(IN_2, HIGH);



    digitalWrite(IN_3, HIGH);
    digitalWrite(IN_4, LOW);

  }

void goAheadRight(){

    digitalWrite(IN_1, LOW);
    digitalWrite(IN_2, HIGH);
```

```
    digitalWrite(IN_3, LOW);
    digitalWrite(IN_4, HIGH);

  }

void goAheadLeft(){

    digitalWrite(IN_1, LOW);
    digitalWrite(IN_2, HIGH);



    digitalWrite(IN_3, LOW);
    digitalWrite(IN_4, HIGH);

  }

void goBackRight(){

    digitalWrite(IN_1, HIGH);
    digitalWrite(IN_2, LOW);



    digitalWrite(IN_3, HIGH);
```

```
    digitalWrite(IN_4, LOW);

  }

void goBackLeft(){

    digitalWrite(IN_1, HIGH);
    digitalWrite(IN_2, LOW);



    digitalWrite(IN_3, HIGH);
    digitalWrite(IN_4, LOW);

  }

void stopRobot(){

    digitalWrite(IN_1, LOW);
    digitalWrite(IN_2, LOW);



    digitalWrite(IN_3, LOW);
    digitalWrite(IN_4, LOW);
```

```
}

void loop() {
  server.handleClient();

    command = server.arg("State");
    if (command == "F") goAhead();
    else if (command == "B") goBack();
    else if (command == "L") goLeft();
    else if (command == "R") goRight();
    else if (command == "I") goAheadRight();
    else if (command == "G") goAheadLeft();
    else if (command == "J") goBackRight();
    else if (command == "H") goBackLeft();
    else if (command == "0") speedCar = 400;
    else if (command == "1") speedCar = 470;
    else if (command == "2") speedCar = 540;
    else if (command == "3") speedCar = 610;
    else if (command == "4") speedCar = 680;
    else if (command == "5") speedCar = 750;
    else if (command == "6") speedCar = 820;
    else if (command == "7") speedCar = 890;
```

```
    else if (command == "8") speedCar = 960;
    else if (command == "9") speedCar = 1023;
    else if (command == "S") stopRobot();
}

void HTTP_handleRoot(void) {

if( server.hasArg("State") ){
     Serial.println(server.arg("State"));
  }
  server.send ( 200, "text/html", "" );
  delay(1);
}
```

Web & App Interface Made to Send Commands

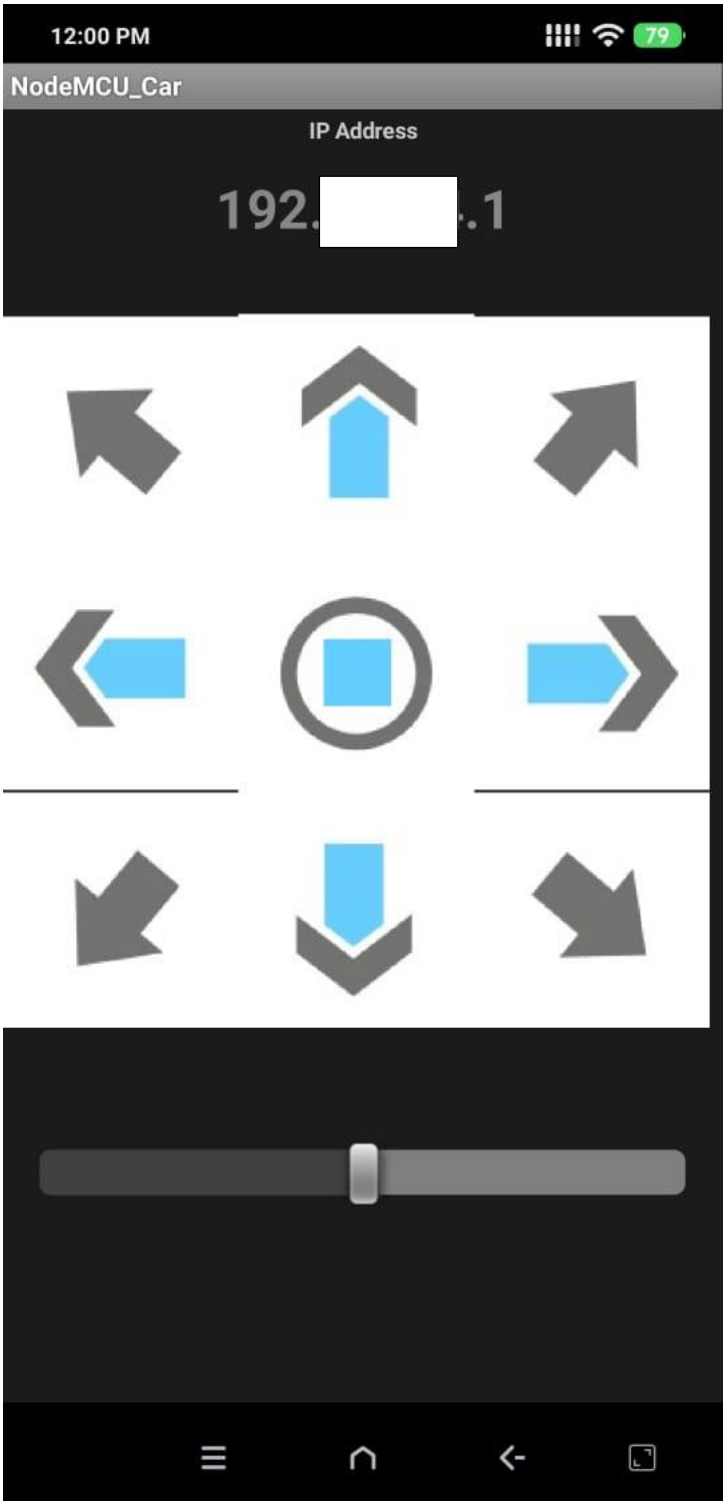

Item Used Of Wifi Control Car

Nodemcu (Esp8266)

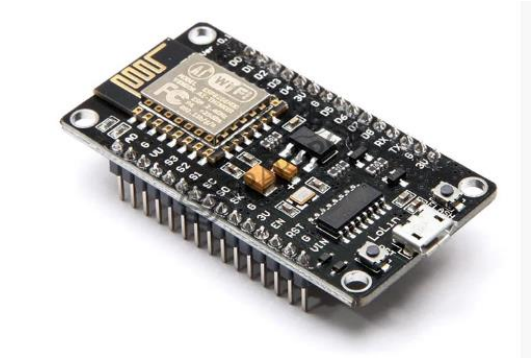

L293d Motor Driver

Bo Motor

Robot Chassis

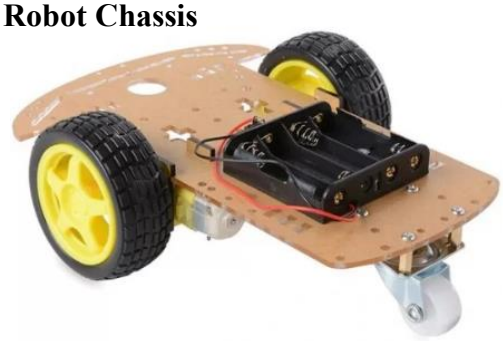

Top View of Build Arduino Car

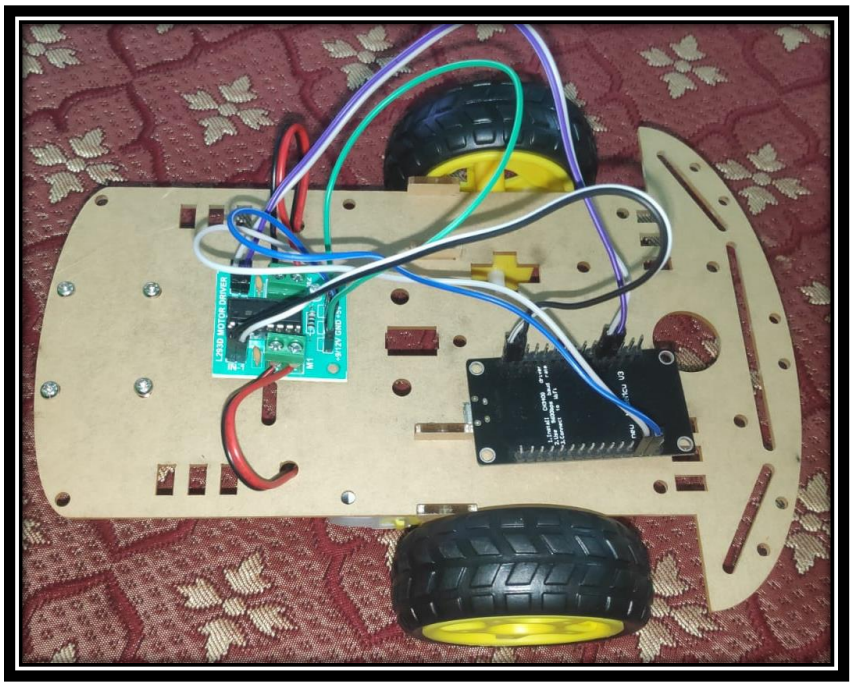

Create the Chassis

Node MCU is an ESP-32S microcontroller (MCU) like the 328P but the thing is that it has WIFI integrated into the ESP-32S. So excellent for IOT beginners. It can connect over WIFI and can also create a Hotspot as well. See the pinout given in the pic above. The GPIO numbers will be used in the Arduino code.

Now here, in this case, the Node MCU connects with my router and it creates a local IP and we can enter that IP in our Mobile or computer (connected to the same router) and can see a webpage coming and there will be certain buttons by which we can control the car.

Setup your chassis. Connect motors and wheels and the caster wheel with screws. Solder wires with motors and connect them to sockets of the driver.

See the figure above and connect. Connect your motors as per your configuration. If you are connecting your motor for the first time with the L298N driver then at a first run a code for moving forward with the UNO. Then give a try to the right and then left. Backward will follow it. It will be just a case of digitalWrite(). Comment freely if you are not okay.

Power is required for the Node MCU as well as the L298N. It will be better by using a different supply for the two things. Give 5V from the power bank at the Vin and GND of Node MCU. You can use 9V or 12Vfor L298N. The whole process is rather easy. See the pic given here and refer to it with the pinout pic of Node MCU. You will understand it better.

We are going to talk about how to make a WIFI-controlled car using Node MCU. Node MCU ESP-32S board L298N Motor Drive is mainly used for this. Also, this can be easily controlled by your smartphone. We have described to you step-by-step how to do this through this tutorial.

Process of this WIFI Controlled Car

When this WIFI-controlled car is powered on, the Node MCU board connects to the WIFI connection. Then, when you press the Commands (Forward, Backward, Left, Right) buttons on the interface created with HTML coding and has live hosted the site, those values will be sent to the Node MCU board via the web cloud. Then, the gear motors rotate according to those values. The L298N motor driver board is used for this. Also, the speed of these motors can be controlled by the slider created on the website.

So, let's make this smart car step by step. The required components are as follows: -

Used the necessary items and quantity with the help of the above hardware required table.

• Secondly, glue the four gear motors to the car kit board, to do this, use the hot glue gun.

• Thirdly, attach the motor driver board to the top of the foam board. Afterward, connect the gear motors to the Motor driver board. For that, use the below circuit diagram.

• OK, now glue the breadboard as follows. Then, attach the Node MCU board to the breadboard

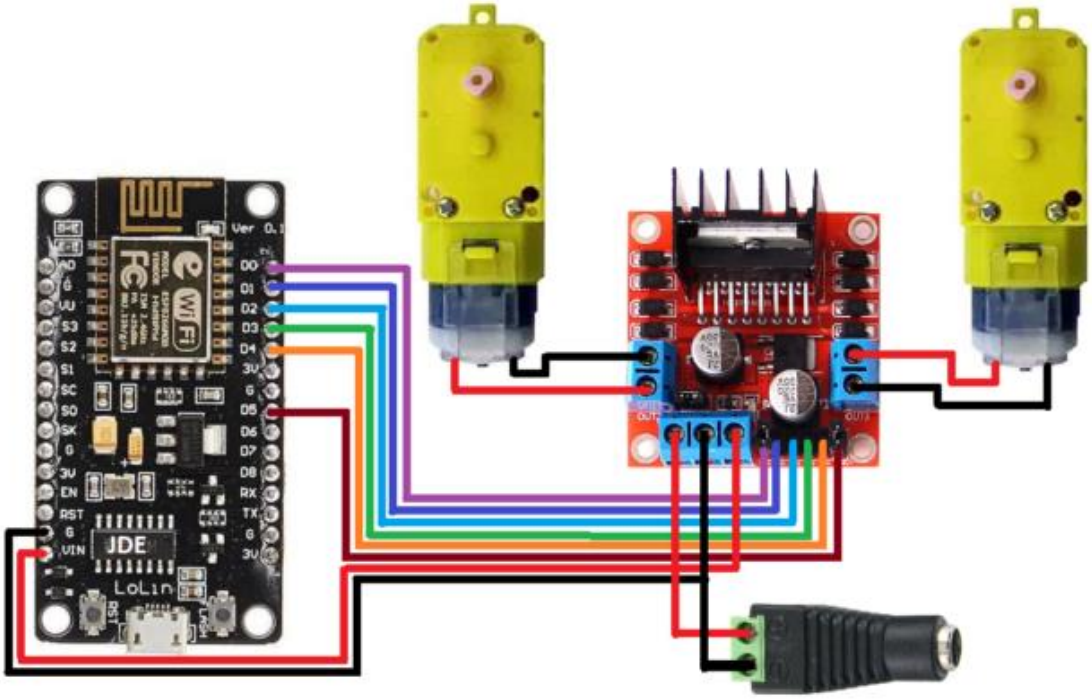

- Next, connect the motor driver board to the Node MCU board. For that, use the above circuit diagram.
- Now, connect the battery holder with the GND and 12v terminals on the motor drive board.
- After, glue it onto the car kit board.
- OK. let's set up the website. After connecting your device to the WIFI and go to the link in the
- above "web & app interface made to send commands" page.
- Lastly, attach the batteries to the battery holder and turns ON your smart car. Now, go to the
- site: - http://wificar.c1.biz/ project and control it easily. OK, enjoy this project.

References

• Anon., n.d. *Sparkfun.* [Online]

Available at: https://www.sparkfun.com/datasheets/Robotics/L298_H_Bridge.pdf

• Anon., n.d. *Tutorial Spoint.* [Online]

Available at: https://www.tutorialspoint.com/microprocessor/microcontrollers_overview.htm

• arduino-esp8266, n.d. *arduino-esp8266.* [Online]

Available at: https://arduino-esp8266.readthedocs.io/en/latest/esp8266wifi/soft-access-point-class.html

• Brain, M., n.d. *howstuffworks.* [Online]

Available at: https://electronics.howstuffworks.com/microcontroller1.htm

• Gudino, M., 2018. *Arrow.* [Online]

Available at: https://www.arrow.com/en/research-and-events/articles/engineering-basics-what-is-amicrocontroller#:~:text=A%20microcontroller%20(sometimes%20called%20an,designed%20to%20implem ent%20certain%20tasks. [Accessed 26 February 2005].

• Keim, R., 2019 . *allaboutcircuits.* [Online]

Available at: https://www.allaboutcircuits.com/technical-articles/what-is-a-microcontroller-introduction component-characteristics-component/

[Accessed 25 March 2019].

• lastminuteengineers, n.d. *lastminuteengineers.* [Online]

Available at: https://lastminuteengineers.com/l298n-dc-stepper-driver-arduino-tutorial/

• microcontrollers, n.d. [Online]

Available at: https://www.eit.edu.au/resources/types-and-applications-of-microcontrollers/

• techopedia, 2016. *techopedia.* [Online]

Available at: https://www.techopedia.com/definition/3641/microcontroller

• White, D., n.d. [Online]

Available at: https://www.easytechjunkie.com/what-is-sdio.htm

Introduction

Overview of Home Automation

Home automation refers to the use of technology to control and manage household systems and appliances. The concept has evolved significantly over the past few decades, with modern systems offering advanced functionalities such as remote control, voice commands, and integration with various smart devices. Home automation aims to enhance convenience, improve energy efficiency, and provide better security for homeowners. The growing popularity of IoT (Internet of Things) has further accelerated the adoption of home automation technologies, making it possible to connect and control a wide range of devices over the internet.

Importance of Home Automation

Home automation offers numerous benefits, making it an essential component of modern living. Firstly, it provides unparalleled convenience by allowing users to control various aspects of their homes, such as lighting, heating, and security, from their smartphones or other devices. This not only saves time but also enhances the overall living experience. Secondly, home automation improves energy efficiency by optimizing the use of appliances and systems, which can lead to significant cost savings. For instance, smart thermostats can adjust heating and cooling based on occupancy and preferences, reducing energy waste. Lastly, home automation enhances security through features like remote surveillance, automated door locks, and alarm systems, giving homeowners peace of mind.

Microcontrollers

Microcontrollers are everywhere around us, even when we drive our vehicles, on all computers we use including smartphones and tablets, or sometimes when making a cup of coffee on our coffee machines. With the rapid spreading of IoT technology, data is constantly being gathered, microcontrollers have become a huge part of the modern world with a lot of fields of application.

What is a Microcontroller?

A microcontroller which is also called an MCU or Microcontroller Unit is a single Integrated Circuit (IC) that is usually used for a specific application and designed to implement certain

specific tasks. This is a small computer based on a single metal-oxide-semiconductor (MOS) integrated circuit (IC) chip. A microcontroller contains one or more CPUs or processor cores with memory and programmable input/output peripherals attached to it. Program memory in the form of ferroelectric RAM, NOR flash, or OTP ROM is also often included on this chip, as well as a small amount of RAM along it.

“Microcontroller” is a well-chosen name for this apparatus because it emphasizes the defining characteristics of this product category precisely. The prefix “micro” implies size or the smallness of the device and the term "controller" here implies the enhanced ability of the device to perform control functions. The functionality of this device is a result of a combination of a digital processor and a digital memory with additional hardware components that are specifically designed to help the microcontroller to interact with the other components.

Microcontrollers are usually designed for embedded applications, in contrast to the microprocessors which are used in personal computers or other general-purpose applications. They are essentially simple miniature personal computers designed to control small features of a larger component, without a complex front-end operating system.

A microcontroller is similar to but less sophisticated than, a System on a Chip (SoC). An SoC may include a microcontroller as one of its components, but in addition, it is also integrated with advanced extensions like a graphics processing unit (GPU), a Wi-Fi module, or coprocessors.

By reducing the size and cost compared to a design used on a separate microprocessor, memory, and input/output devices, microcontrollers make it economical to digitally control even more devices and processes very easily. Mixed-signal microcontrollers are very common. They function by integrating analog components needed to control non-digital electronic systems. About the internet of things and robotics, microcontrollers are an economical and popular means of data collection, sensing, and actuating the physical world as edge devices.

Microcontrollers generally can retain functionality while waiting for an event like a button press or some other interrupt. Other microcontrollers may serve performance-critical roles at which they may need to act more like a digital signal processor (DSP) than a microcontroller, with higher clock speeds and power consumption.

A microcontroller is also known as an embedded controller. Various types of microcontrollers are available in the market with different word lengths. It is like a compressed microcomputer manufactured to control the functions of the embedded systems in appliances machines used in offices, robots, home appliances, motor vehicles. Microcontrollers are employed in devices that need a degree of control to be applied by the user of the device in controlling it.

A microcontroller can be also defined as a small and low-cost microcomputer, which is designed to perform the specific tasks of embedded systems like displaying microwave information, receiving remote signals, etc. Any electric appliance that stores, measures, displays information, or calculates comprises a microcontroller chip inside it.

What a microcontroller does is, gathers input, process this information, and outputs a certain action based on the information gathered by it. Microcontrollers usually operate at lower speeds, around the 1MHz to 200 MHz range, and are designed to consume less power because they normally are embedded inside other devices that can have greater power consumptions than the MCU.

A Microcontroller can be considered as the backbone of Embedded Systems and its most important feature is the fact that "It can think". A Microcontroller may look like a simple electronics chip, but it’s way too powerful because it's programmable. Using a programming code, we can control all I/O pins of a microcontroller and are used to perform multiple functions.

C and assembly languages are usually used for programming a microcontroller but the HEX File which gets uploaded in Microcontrollers is in machine language. There are also other languages available for programming a microcontroller but beginners start with assembly language as it provides a clear idea about the microcontroller's architecture.

History

The origins stories of both the microprocessor and the microcontroller go back to the invention of the MOSFET, also known as the MOS transistor. Mohamed M. Atalla and Dawon Kahng at Bell Labs invented it in 1959. Atalla also proposed the MOS integrated circuit, which was an integrated circuit chip fabricated using MOSFETs. MOS had higher transistor density and lower manufacturing costs than bipolar chips. MOS chips increased in complexity with time, leading to large-scale integration (LSI) with hundreds of transistors on a single MOS chip. The application

of the MOS LSI chip was the basis for the first microprocessors when engineers recognized that a complete computer processor could be contained on a single MOS LSI chip.

The first-ever multi-chip microprocessors, the Four-Phase Systems, and the Garrett Ai Research MP944 were developed with multiple MOS LSI chips. The first single-chip microprocessor, which was the Intel 4004, was released on a single MOS LSI chip.

Engineers Gary Boone and Michael Cochran created the first microcontroller in 1971. The TMS 1000, combined read-only memory, read/write memory, processor, and clock on one chip and mainly targeted at embedded systems.

After that, Japanese electronics manufacturer began producing microcontrollers for automobiles, including 4-bit MCUs for in-car entertainment, automatic wipers, electronic locks, and dashboard, and 8-bit MCUs for engine control.

Nowadays microcontrollers are cheap and are also readily available for hobbyists, with large online communities around certain processors.

A typical home in a developed country is likely to have only four general-purpose microprocessors but around three dozen microcontrollers. A typical mid-range automobile has about 30 microcontrollers. They can also be found in many electrical devices such as washing machines, microwave ovens, and telephones.

Types of Microcontrollers

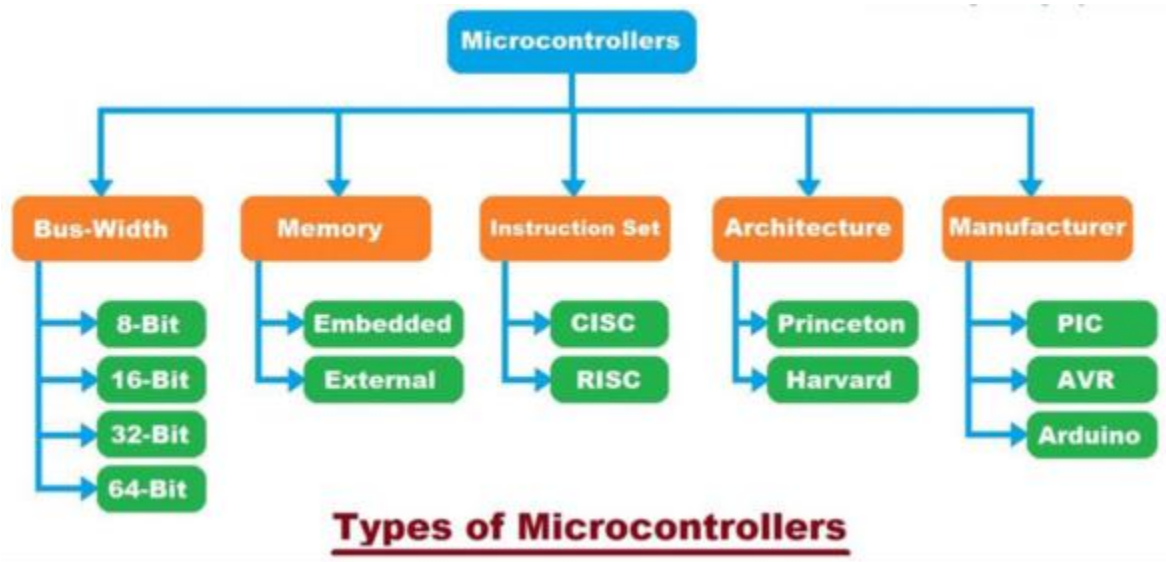

Microcontrollers are classified based on Bus-width, Memory, Instruction Set, Architecture, & Manufacturer.

Fields where Microcontrollers are used.

Microcontroller has many applications like:

• As a peripheral controller of a PC

• In robotics and embedded systems

• In bio-medical equipment

• In communication and power systems

• In automobiles and security systems

• When implanting medical equipment

• In fire detection devices

• In temperature and light-sensing devices

• In industrial automation devices

• In-process control devices

• When measuring and controlling revolving objects

ESP-8266

ESP8266 is a low-cost Wi-Fi chip produced by Espressif Systems.

ESP Modules

ESP-01

ESP-12

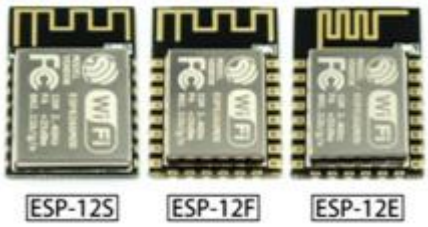

ESP-02

The functional diagram of ESP8266EX is shown as in Figure 3-1.

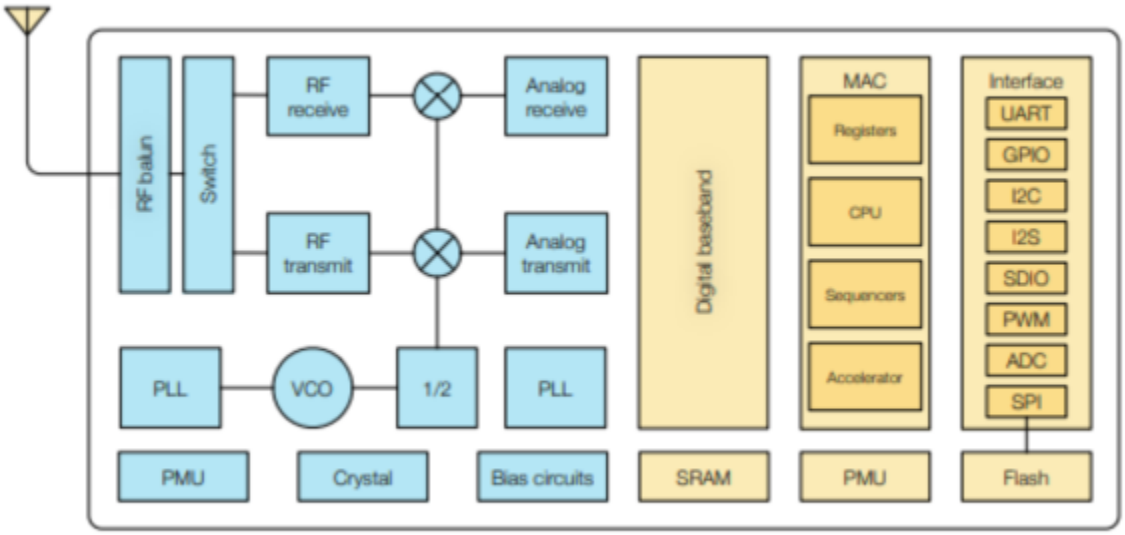

Figure 3-1. Functional Block Diagram

ESP-8266 Chip Block Diagram

- Esp8266 has integrated a Tensilica L106 32-bit RISC processor. It got extra-low power consumption, which makes this chip very much suitable for small circuits, IOT Projects.
- This chip reaches a maximum clock speed of 160MHz.
- Wi-Fi- 2.4GHz receiver & transmitter
- User programs are stores in SPI flash
- Memory - 32KB instruction RAM
- External SPI Flash 512KB to 4MB typically in some cases 16MB supported according to the board you chosen

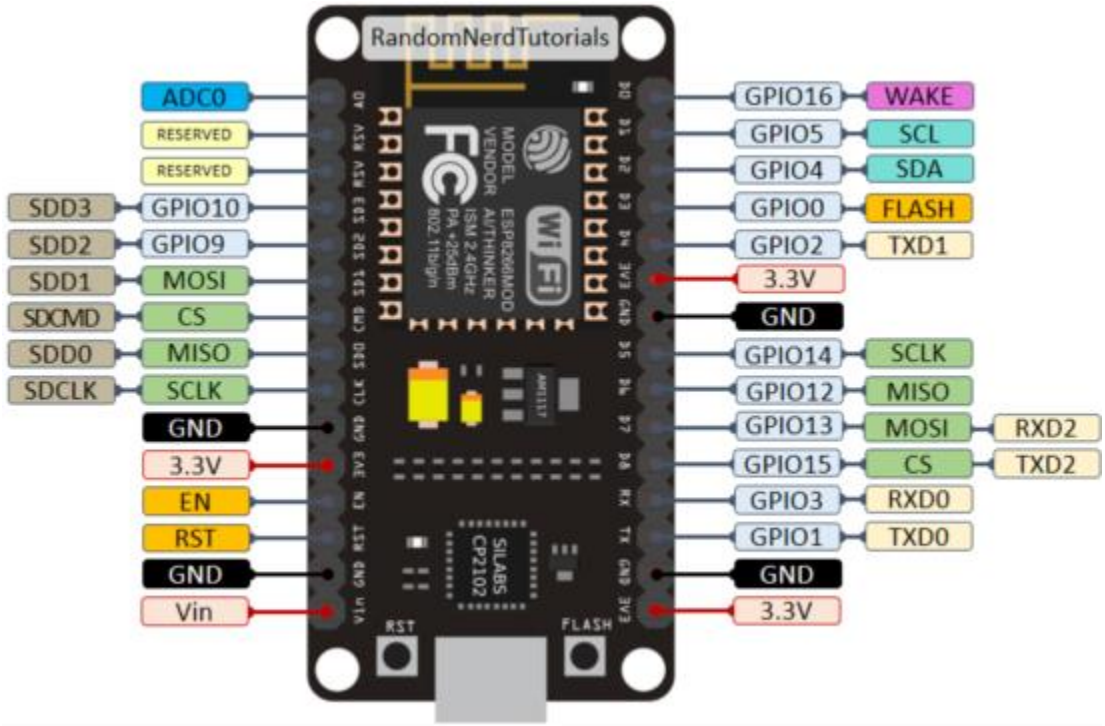

GPIO – I/O Pins in the Board

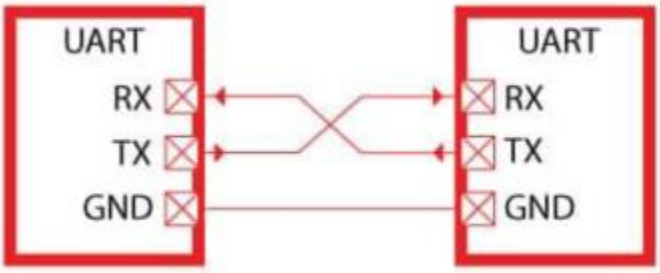

SPI- is a synchronous serial communication interface via SS SCLK MOSI MISO Pins.

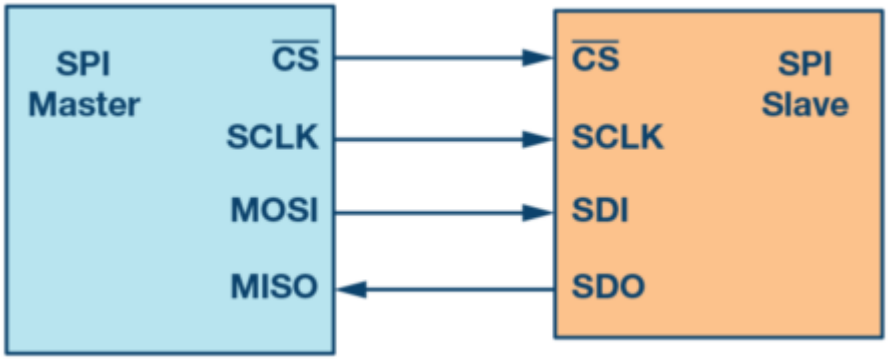

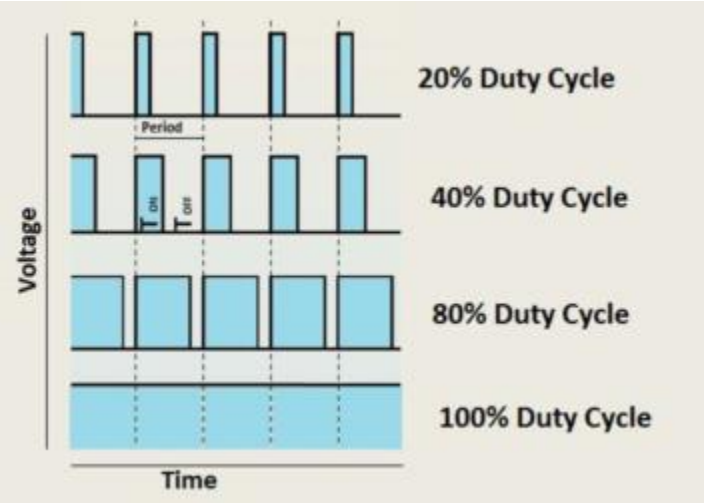

PWM - way to reduce the power delivered by an electrical signal

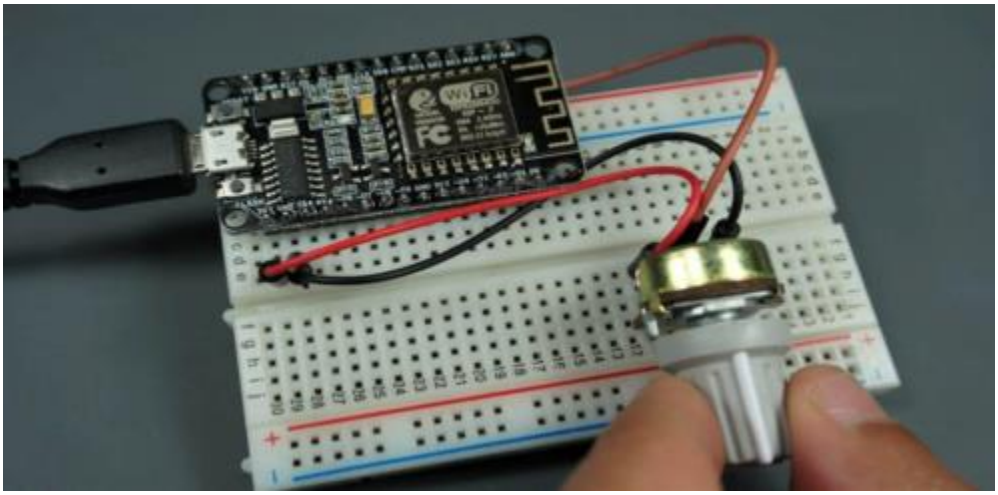

ADC-Analog to Digital Converter Converting analog inputs to digital signals

SDIO Interface Bus:

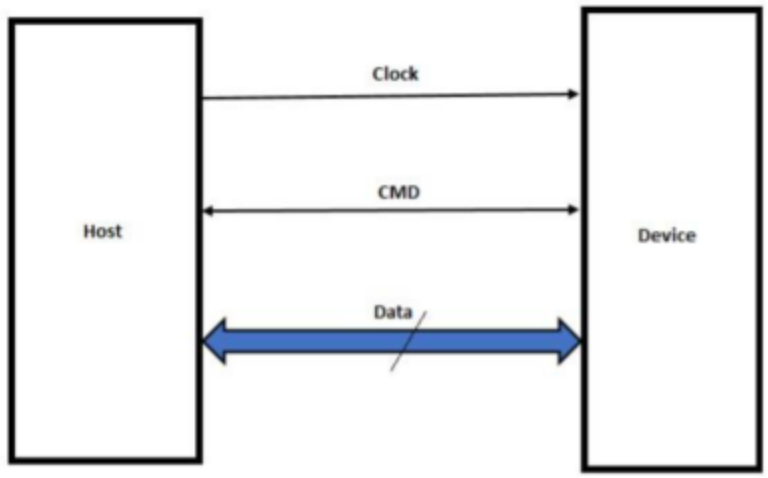

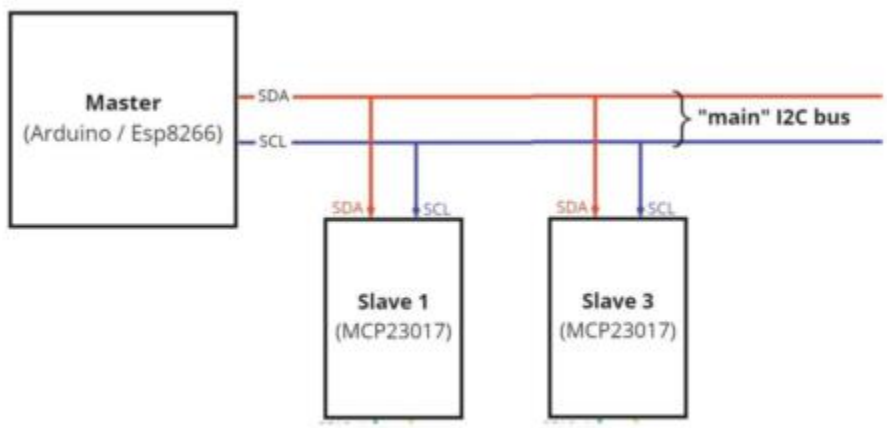

I2C is a serial communication protocol data is transferred bit by bit by a single wire (SDA Line). SCL is the clock line. It is used to synchronize all data transfers over the I2C bus. SDA is the data line.

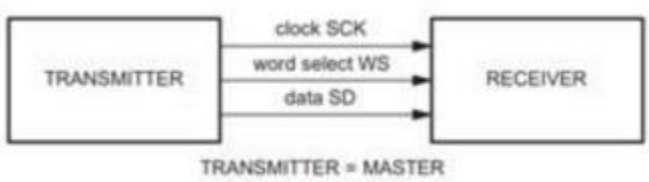

I2S is an electrical serial bus interface used to connect digital audio devices. Consists of a clock line, word clock (left-right clock) line, and serial data line.

SDIO (Secure Digital Input/Output Interface) - SDIO is used for Data exchange between host and device. SDIO can connect the SD Slot with I/O devices like Bluetooth, Wireless LAN, GPS Receiver, Digital Camera, etc.

Getting Started with NodeMCU

Setting Up the NodeMCU Development Environment

To begin working with NodeMCU, you need to set up the development environment. This typically involves installing the Arduino IDE and configuring it to work with NodeMCU. The Arduino IDE is a popular choice for programming NodeMCU due to its user-friendly interface and extensive library support.

1. Download and Install Arduino IDE: Visit the official Arduino website and download the latest version of the Arduino IDE for your operating system. Follow the installation instructions.

2. Add ESP8266 Board Manager: Open the Arduino IDE, go to `File > Preferences`, and enter the following URL in the "Additional Boards Manager URLs" field: `http://arduino.esp8266.com/stable/package_esp8266com_index.json`. Then, go to `Tools > Board > Boards Manager`, search for `ESP8266`, and install the package.

3. Select NodeMCU Board: Once the ESP8266 package is installed, select `NodeMCU 1.0 (ESP-12E Module)` from the `Tools > Board` menu.

Installing the Required Software

After setting up the Arduino IDE, you need to install the necessary libraries to work with NodeMCU. The following steps will guide you through this process:

1. Install the Blynk Library: In the Arduino IDE, go to `Sketch > Include Library > Manage Libraries`, search for `Blynk`, and install the library.

2. Install Additional Libraries: Depending on your project, you may need other libraries such as `Adafruit_Sensor` or `DHT`. Follow the same process to install these libraries.

Basic Programming with NodeMCU

Once the development environment is set up, you can start writing and uploading code to NodeMCU. Here's a simple example to blink an LED:

```cpp
#define LED_PIN 2 // Built-in LED pin


void setup() {
  pinMode(LED_PIN, OUTPUT);
}


void loop() {
  digitalWrite(LED_PIN, HIGH); // Turn the LED on
  delay(1000); // Wait for a second
  digitalWrite(LED_PIN, LOW); // Turn the LED off
  delay(1000); // Wait for a second
}
```

To upload the code, connect the NodeMCU to your computer via USB, select the correct COM port from `Tools > Port`, and click the upload button.

Introduction to Blynk

What is Blynk?

Blynk is a powerful IoT platform designed to simplify the development of mobile and web applications for controlling and monitoring hardware remotely. It provides an intuitive interface for creating custom dashboards, making it easy to build user-friendly applications without extensive coding. Blynk supports a wide range of hardware platforms, including NodeMCU, Arduino, Raspberry Pi, and others, making it a versatile choice for IoT projects.

Features of Blynk

Blynk offers a variety of features that make it ideal for home automation and other IoT applications:

Cloud Service: Blynk's cloud service ensures real-time data synchronization and remote control.

Blynk App: Available on iOS and Android, the Blynk app allows users to create custom dashboards with widgets such as buttons, sliders, and graphs.

Blynk Library: Provides a simple way to connect your hardware to the Blynk cloud and control it using the Blynk app.

Widgets: A wide range of widgets for various functions, including buttons, sliders, LED indicators, and more.

Notifications: Real-time notifications and alerts based on sensor data or events.

Advantages of Using Blynk for Home Automation

Blynk simplifies the process of building and deploying IoT applications, making it an excellent choice for home automation. Its drag-and-drop interface allows users to create custom dashboards quickly, while the cloud service ensures seamless remote control and data synchronization. Blynk's extensive widget library and support for multiple hardware platforms provide the flexibility needed to create sophisticated home automation systems. Additionally, Blynk's active community and comprehensive documentation make it easy for both beginners and experienced developers to get started.

5. Setting Up Blynk

Creating a Blynk Account

To use Blynk, you need to create an account on the Blynk app. Follow these steps:

1. Download the Blynk App: Available on the App Store and Google Play.

2. Create an Account:Open the app and sign up using your email address.

3. Verify Your Email: Check your email for a verification link and follow the instructions to verify your account.

Setting Up a New Project on Blynk

Once you have an account, you can set up a new project:

1. Create a New Project:Open the Blynk app and tap the `New Project` button.

2. Configure Project Settings: Enter a project name, select your hardware (e.g., NodeMCU), and choose a connection type (Wi-Fi).

3. Receive Authentication Token: Blynk will email you an authentication token. This token is used to link your hardware to the Blynk project.

Understanding the Blynk Interface

The Blynk interface consists of a dashboard where you can add and configure widgets. Key components include:

Widgets: Drag-and-drop widgets onto the dashboard to create your custom interface.

Settings:Tap on a widget to configure its properties, such as pin assignments and labels.

Play Mode:Switch to play mode to interact with your project in real-time.

Adding Widgets to Your Blynk Project

Widgets are the building blocks of your Blynk project. To add widgets:

1. Open Widget Box:Tap the `+` icon to open the widget box.

2. Select Widgets: Choose widgets that suit your project needs, such as buttons, sliders, and gauges.

3. Configure Widgets: Assign virtual pins, set labels, and adjust other settings as needed.

6. NodeMCU and Blynk Integration

Connecting NodeMCU to Blynk

To connect NodeMCU to Blynk, follow these steps:

1. Include Blynk Library: Include the Blynk library in your Arduino sketch.

2. Add Authentication Token: Copy the authentication token from your email and paste it into your sketch.

3. Connect to Wi-Fi: Enter your Wi-Fi SSID and password in the sketch.

Here's a sample code to get started:

```cpp
#define BLYNK_PRINT Serial

#include <ESP8266WiFi.h>

#include <BlynkSimpleEsp8266.h>


char auth[] = "YourAuthToken";
```

```
char ssid[] = "YourWiFiSSID";

char pass[] = "YourWiFiPassword";


void setup() {

  Serial.begin(115200);

  Blynk.begin(auth, ssid, pass);

}


void loop() {

  Blynk.run();

}
```

Writing Code to Control NodeMCU Using Blynk

With NodeMCU connected to Blynk, you can control various aspects of your project using Blynk's widgets. For example, to control an LED, you can use a virtual button widget:

```cpp
#define LED_PIN 2


BLYNK_WRITE(V1) {

  int pinValue = param.asInt();

  digitalWrite(LED_PIN, pinValue);

}


void setup() {
```

```
  Serial.begin(115200);
  Blynk.begin(auth, ssid, pass);
  pinMode(LED_PIN, OUTPUT);
}

void loop() {
  Blynk.run();
}
```

In this example, when the button widget (assigned to virtual pin V1) is pressed, the LED connected to pin 2 will turn on or off based on the button state.

Testing the Connection

To test the connection between NodeMCU and Blynk:

1. Upload the Sketch: Upload the code to NodeMCU using the Arduino IDE.
2. Open the Blynk App: Ensure your NodeMCU is powered and connected to Wi-Fi.
3. Interact with Widgets: Use the widgets in the Blynk app to control and monitor your NodeMCU.

If everything is set up correctly, you should be able to control your hardware using the Blynk app. If you encounter issues, check the serial monitor for error messages and ensure your Wi-Fi credentials and authentication token are correct.

Basic Home Automation Projects

Controlling an LED with Blynk

A simple and effective project to get started with NodeMCU and Blynk is controlling an LED. This project involves using a button widget in the Blynk app to turn an LED on and off.

Hardware Required:

- NodeMCU
- LED
- Resistor (220 ohms)
- Breadboard and jumper wires

Steps:

1. Connect the LED: Connect the LED to the NodeMCU's GPIO pin (e.g., D2) with a resistor in series.

2. Set Up Blynk Project: Add a button widget in the Blynk app and assign it to a virtual pin (e.g., V1).

3. Upload Code: Use the following code to control the LED:

```cpp
#define BLYNK_PRINT Serial

#include <ESP8266WiFi.h>

#include <BlynkSimpleEsp8266.h>


char auth[] = "YourAuthToken";
```

```
char ssid[] = "YourWiFiSSID";
char pass[] = "YourWiFiPassword";
#define LED_PIN 2

BLYNK_WRITE(V1) {
  int pinValue = param.asInt();
  digitalWrite(LED_PIN, pinValue);
}

void setup() {
  Serial.begin(115200);
  Blynk.begin(auth, ssid, pass);
  pinMode(LED_PIN, OUTPUT);
}

void loop() {
  Blynk.run();
}
```

4. Test the Project: Use the Blynk app to control the LED. The LED should turn on or off based on the button state.

Monitoring Temperature and Humidity

Another practical home automation project is monitoring temperature and humidity using a DHT11 or DHT22 sensor and displaying the data on the Blynk app.

Hardware Required:

- NodeMCU
- DHT11/DHT22 sensor
- Breadboard and jumper wires

Steps:

1. Connect the Sensor: Connect the DHT sensor to the NodeMCU (e.g., data pin to D4).
2. Set Up Blynk Project: Add value display widgets in the Blynk app for temperature and humidity.
3. Upload Code: Use the following code to read sensor data and send it to Blynk:

```cpp
#define BLYNK_PRINT Serial
#include <ESP8266WiFi.h>
#include <BlynkSimpleEsp8266.h>
#include <DHT.h>

char auth[] = "YourAuthToken";
char ssid[] = "YourWiFiSSID";
char pass[] = "YourWiFiPassword";
#define DHTPIN D4
#define DHTTYPE DHT11
```

```
DHT dht(DHTPIN, DHTTYPE);

BlynkTimer timer;


void sendSensor() {

  float h = dht.readHumidity();

  float t = dht.readTemperature();

  Blynk.virtualWrite(V5, t);

  Blynk.virtualWrite(V6, h);

}


void setup() {

  Serial.begin(115200);

  Blynk.begin(auth, ssid, pass);

  dht.begin();

  timer.setInterval(2000L, sendSensor);

}


void loop() {

  Blynk.run();

  timer.run();

}
```

4. Test the Project: Monitor the temperature and humidity on the Blynk app. The sensor readings should update every few seconds.

Creating a Smart Door Lock

A more advanced project involves creating a smart door lock using a solenoid lock and a relay module. This project allows you to control the door lock remotely via the Blynk app.

Hardware Required:

- NodeMCU

- Solenoid lock

- Relay module

- Breadboard and jumper wires

Steps:

1. **Connect the Hardware:** Connect the solenoid lock to the relay module and the relay module to the NodeMCU (e.g., control pin to D3).

2. **Set Up Blynk Project:** Add a button widget in the Blynk app for controlling the lock.

3. **Upload Code:** Use the following code to control the lock:

```cpp
#define BLYNK_PRINT Serial

#include <ESP8266WiFi.h>

#include <BlynkSimpleEsp8266.h>


char auth[] = "YourAuthToken";
```

```
char ssid[] = "YourWiFiSSID";
char pass[] = "YourWiFiPassword";
#define RELAY_PIN D3

BLYNK_WRITE(V2) {
  int pinValue = param.asInt();
  digitalWrite(RELAY_PIN, pinValue);
}

void setup() {
  Serial.begin(115200);
  Blynk.begin(auth, ssid, pass);
  pinMode(RELAY_PIN, OUTPUT);
}

void loop() {
  Blynk.run();
}
```

4. Test the Project: Use the Blynk app to control the solenoid lock. The lock should engage or disengage based on the button state.

Advanced Home Automation Projects

Smart Lighting System

A smart lighting system can automatically adjust lighting based on ambient light levels and user preferences. This project involves using light sensors and relays to control multiple lights.

Hardware Required:

- NodeMCU
- Light sensor (e.g., LDR)
- Relay modules
- LED lights
- Breadboard and jumper wires

Steps:

1. Connect the Light Sensor and Relays: Connect the light sensor to an analog pin (e.g., A0) and the relays to digital pins (e.g., D1 and D2).

2. Set Up Blynk Project: Add widgets for controlling and monitoring the lights.

3. Upload Code:Use the following code to control the lights based on ambient light levels:

```cpp
#define BLYNK_PRINT Serial

#include

<ESP8266WiFi.h>
```

```
#include <BlynkSimpleEsp8266.h>

char auth[] = "YourAuthToken";
char ssid[] = "YourWiFiSSID";
char pass[] = "YourWiFiPassword";
#define LIGHT_SENSOR_PIN A0
#define RELAY1_PIN D1
#define RELAY2_PIN D2

BlynkTimer timer;

void controlLights() {
  int lightLevel = analogRead(LIGHT_SENSOR_PIN);
  if (lightLevel < 500) {
    digitalWrite(RELAY1_PIN, HIGH);
    digitalWrite(RELAY2_PIN, HIGH);
  } else {
    digitalWrite(RELAY1_PIN, LOW);
    digitalWrite(RELAY2_PIN, LOW);
  }
}

void setup() {
```

```
  Serial.begin(115200);
  Blynk.begin(auth, ssid, pass);
  pinMode(RELAY1_PIN, OUTPUT);
  pinMode(RELAY2_PIN, OUTPUT);
  timer.setInterval(1000L, controlLights);
}

void loop() {
  Blynk.run();
  timer.run();
}
```

4. Test the Project: The lights should turn on or off based on the ambient light levels and user controls in the Blynk app.

Home Security System

A home security system can include motion detectors, cameras, and alarm systems. This project demonstrates how to use PIR sensors to detect motion and send alerts via Blynk.

Hardware Required:

- NodeMCU
- PIR sensor
- Buzzer or alarm

- Breadboard and jumper wires

Steps:

1. **Connect the PIR Sensor and Buzzer:** Connect the PIR sensor to a digital pin (e.g., D5) and the buzzer to another pin (e.g., D6).

2. **Set Up Blynk Project:** Add widgets for monitoring motion and controlling the alarm.

3. **Upload Code:** Use the following code to monitor motion and trigger the alarm:

```cpp
#define BLYNK_PRINT Serial

#include <ESP8266WiFi.h>

#include <BlynkSimpleEsp8266.h>


char auth[] = "YourAuthToken";

char ssid[] = "YourWiFiSSID";

char pass[] = "YourWiFiPassword";

#define PIR_PIN D5

#define BUZZER_PIN D6


void setup() {

  Serial.begin(115200);

  Blynk.begin(auth, ssid, pass);

  pinMode(PIR_PIN, INPUT);

  pinMode(BUZZER_PIN, OUTPUT);
```

```
}

void loop() {
  Blynk.run();
  int motionDetected = digitalRead(PIR_PIN);
  if (motionDetected) {
    digitalWrite(BUZZER_PIN, HIGH);
    Blynk.notify("Motion detected!");
  } else {
    digitalWrite(BUZZER_PIN, LOW);
  }
}
```

Test the Project: When motion is detected, the buzzer should sound, and you should receive a notification on the Blynk app.

Automated Watering System for Plants

An automated watering system uses soil moisture sensors to monitor soil moisture levels and control water pumps to irrigate plants as needed.

Hardware Required:

- NodeMCU
- Soil moisture sensor

- Water pump

- Relay module

- Breadboard and jumper wires

Steps:

1. Connect the Soil Moisture Sensor and Relay: Connect the soil moisture sensor to an analog pin (e.g., A0) and the relay to a digital pin (e.g., D7).

2. Set Up Blynk Project: Add widgets for monitoring soil moisture levels and controlling the water pump.

3. Upload Code: Use the following code to control the water pump based on soil moisture levels:

```cpp
#define BLYNK_PRINT Serial

#include <ESP8266WiFi.h>

#include <BlynkSimpleEsp8266.h>


char auth[] = "YourAuthToken";

char ssid[] = "YourWiFiSSID";

char pass[] = "YourWiFiPassword";

#define SOIL_SENSOR_PIN A0

#define RELAY_PIN D7


BlynkTimer timer;
```

```
void controlWaterPump() {
  int soilMoisture = analogRead(SOIL_SENSOR_PIN);
  if (soilMoisture < 300) {
    digitalWrite(RELAY_PIN, HIGH);
  } else {
    digitalWrite(RELAY_PIN, LOW);
  }
  Blynk.virtualWrite(V3, soilMoisture);
}

void setup() {
  Serial.begin(115200);
  Blynk.begin(auth, ssid, pass);
  pinMode(RELAY_PIN, OUTPUT);
  timer.setInterval(10000L, controlWaterPump);
}

void loop() {
  Blynk.run();
  timer.run();
}
```

4. Test the Project: The water pump should activate when soil moisture levels are low and turn off when adequate moisture is detected.

Case Study: Comprehensive Home Automation System

Project Planning

A comprehensive home automation system integrates multiple functionalities, such as lighting, security, and climate control, into a cohesive system. Planning involves defining the scope, identifying required components, and setting project milestones.

Objectives and Scope:

- Automate lighting based on occupancy and time of day.
- Monitor and control home security systems remotely.
- Manage indoor climate using smart thermostats and sensors.
- Integrate voice control for added convenience.

Required Hardware and Software

Hardware:

- NodeMCU modules
- Various sensors (PIR, temperature, humidity)
- Actuators (relays, motors)
- Smart devices (thermostats, cameras)

Software:

- Arduino IDE

- Blynk app and library

- Additional libraries for specific sensors and actuators

Implementation Steps

1. Design System Architecture: Define how each component will interact within the system. Create wiring diagrams and flowcharts.

2. Assemble Hardware: Set up the physical components based on the system design.

3. Develop and Test Code: Write code for each subsystem (lighting, security, climate control) and test individually.

4. Integrate Subsystems: Combine code for all subsystems and ensure they work together seamlessly.

5. Set Up Blynk Dashboard: Create a comprehensive dashboard with widgets for controlling and monitoring each subsystem.

Testing and Debugging

Testing involves verifying that each subsystem functions correctly both independently and as part of the integrated system. Debugging common issues, such as connectivity problems or sensor malfunctions, is crucial to ensure reliable operation.

Final Deployment

Once testing is complete, deploy the system in the actual home environment. Ensure all components are securely installed and perform final tests to verify functionality. Provide a user manual for operating the system and offer maintenance tips.

Troubleshooting and Debugging

Common Issues with NodeMCU

1. Connectivity Problems: Ensure correct Wi-Fi credentials and check for network stability. Use serial monitor for debugging connection issues.

2. Power Supply Issues: NodeMCU requires a stable 3.3V power supply. Use a dedicated power source if necessary.

3. Flashing Errors: Verify correct board and port settings in the Arduino IDE. Check USB cable and drivers.

Common Issues with Blynk

1. Widget Configuration Errors: Ensure widgets are assigned to the correct virtual pins. Double-check widget settings in the Blynk app.

2. Server Connectivity Issues: Ensure NodeMCU has internet access. Check Blynk server status and try reconnecting.

Debugging Tips and Tricks

1. Use Serial Monitor: Print debug messages to the serial monitor to trace code execution and identify issues.

2. Modular Code Development: Develop and test code in small modules to isolate and fix issues more easily.

3. Community Resources: Utilize forums, documentation, and tutorials for troubleshooting tips and best practices.

Future of Home Automation

Emerging Trends

1. AI and Machine Learning Integration: Advanced algorithms for predictive maintenance, energy optimization, and personalized user experiences.

2. Voice Control and Smart Assistants: Increasing integration with voice-controlled devices like Amazon Alexa and Google Assistant.

3. Enhanced Security Features: Improved encryption and security protocols to protect against cyber threats.

Potential Upgrades

1. Adding More Sensors and Devices: Expand the system with additional sensors for air quality, water leakage, etc.

2. Enhancing Security Features: Implement advanced authentication methods and data encryption for secure communication.

3. Improved Energy Management: Integrate smart meters and energy monitoring tools for better energy management.

Integration with Other Smart Home Devices

1. Compatibility with Existing Systems: Ensure interoperability with other smart home platforms and devices.

2. Expanding the Ecosystem: Integrate with third-party services and platforms for enhanced functionality and convenience.

Conclusion

Summary of Key Points

This report has covered the fundamentals of NodeMCU and Blynk, their roles in home automation, and detailed guides for setting up and implementing various home automation projects. We explored basic and advanced projects, from simple LED control to comprehensive smart home systems, emphasizing the ease of integration and the power of these platforms.

Final Thoughts on NodeMCU and Blynk in Home Automation

NodeMCU and Blynk together form a robust, versatile, and cost-effective solution for home automation. Their combined strengths in connectivity, ease of use, and flexibility make them ideal for both beginners and experienced developers. As the IoT landscape continues to evolve, these platforms will remain pivotal in driving innovation and expanding the possibilities of smart home technologies.

References

1. NodeMCU Documentation: Comprehensive guide and technical documentation for NodeMCU.

2. Blynk Documentation: Official documentation for setting up and using the Blynk platform.

3. Arduino Libraries: Libraries and examples for integrating various sensors and actuators with NodeMCU.

4. Community Forums: Online forums and communities for troubleshooting and project ideas.

5. Technical Articles: In-depth articles and tutorials on home automation using NodeMCU and Blynk.